Open Frame Series

Model Name		VOX-065-TS	VOX-084-TS	VOX-104-TS	VOX-150-TS
LCD Display	Size	6.5" VGA LCD	8.4" SVGA LCD	10.4" SVGA LCD	15" XGA LCD
	Resolution	640 x 480	800 x 600	800 x 600	1024 x 768
	Colors	262,144	262,144	262,144	262,144
	View Angle	Vertical 140°, Horizontal 160°		Vertical 130°, Horizontal 160°	
	Brightness	800 cd/m2	250 cd/m2	400 cd/m2	350 cd/m2
	Backlight life	50,000 hrs	30,000 hrs	50,000 hrs	50,000 hrs
	Contrast Ratio	600:1	600:1	700:1	700:1
CPU		Vortex86DX2 933MHz (L1: I/D-Cache 16/16KB, L2:256KB) | Vortex86DX3 1GHz (L1: I/D-Cache 32/32KB, L2:512KB)			
System Memory		512MB/1GB/2GB Memory onboard			
Model Type		VDX2-6526 / VDX3-6726			
Functions		RS-232/485 x 4 | USB Ports (Ver2.0) x 2 | SATA | 16-bit GPIO | 10/100Mbps Ethernet x 1 & Giga Ethernet x 2			
Touch Screen Type		4-wire Analog Resistive			
Power Requirement		5VDC & 12VDC | 24W (Max.)			
Operating Temperature		0 ~ +50 °C / -20 ~ +60 °C			
Dimensions (W x H x D) mm		190 x 145 x 41.9	230.4 x 150 x 29	303 x 204 x 45.5	368 x 278 x 45.5
Operating System		DOS, Linux, Win CE, Win XP, Win 7, Windows Embedded Standard			

For more I/O requirement, please contact your region sales

LCD Series

Model Name	5.7" LCD SET	6.5" LCD SET	8.4" LCD SET	10.4" LCD SET	15" LCD SET	15" V5 LCD SET
Size	5.7" VGA LCD	6.5" VGA LCD	8.4" SVGA LCD	10.4" SVGA LCD	15" XGA LCD	15" XGA LCD
Resolution	640 x 480	640 x 480	800 x 600	800 x 600	1024 x 768	1024 x 768
Colors & Backlight	262,144 / LED	262,144 / 16.2M / LED				
View Angle	V 100°, H 140°	V 140°, H 160°	V 140°, H 160°	V 130°, H 160°	V 150°, H 160°	V 140°, H 160°
Brightness	500 cd/m2	800 cd/m2	250 cd/m2	400 cd/m2	350 cd/m2	250 cd/m2
Backlight life	50,000 hrs	50,000 hrs	30,000 hrs	50,000 hrs	50,000 hrs	30,000 hrs
Contrast Ratio	300:1	600:1	600:1	700:1	800:1	700:1
Response Time	50 ms	25 ms	30 ms	15 ms	8 ms	8 ms
Signal Interface	18 bits TTL	18/24 bits LVDS				
Power Requirement	3.3 VDC					
Power Consumption	2W	3W	3.66W	2.88W	7.5W	5.68W
Operating Temperature	-20 ~ +70 °C	-30 ~ +80 °C	-20 ~ +70 °C	-30 ~ +80 °C	0 ~ +65 °C	-30 ~ +85 °C
Accessories	LCD Panel with LCD Cable					
Optional	USB/ RS-232 Touch Controller | 4-wire Analog Resistive Touch Screen					

For more information, please scan QR code

ICOP TECHNOLOGY INC.
昭營科技股份有限公司
intelligent control on processor
No.15, Wugong 5th Rd. Xinzhuang Dist., New Taipei City, #24890, Taiwan, R.O.C. TEL：886-2-8990-1933 FAX：886-2-8990-2045 http://www.icop.tw

Product Change Notice For 8.4” LCD Set

Issue Date: 2023/10/31

For 8.4" LCD higher luminance support, ICOP will take IVO 8.4" M084GNS1 R1 with 350nits luminance to replace the original AUO 8.4" AUO G084SN03V3 with 250nits luminance, which all mechanical dimension, connector’s location, LCD cables, and LCD timing are the same on both of IVO 8.4" M084GNS1 and AUO 8.4" AUO G084SN03V3 except luminance.

ICOP standard 8.4" LCD sets and 8.4” open frame panel PC will start to use IVO 8.4” LCD panel in Nov, 2023. The product change will increase LCD luminance, and ICOP also keeps the original price for future long term support.

Original Part Number		New Replacement	Description
LCD-AU084-V3-SET		LCD-IVO084-SET	IVO 8.4" M084GNS1 R1 350nits w/ LVDS Cable.
LCD-AU084-V3-U-SET	===>	LCD-IVO084-U-SET	IVO 8.4" M084GNS1 R1 350nits w/ LVDS Cable,Touch Screen and USB TouchScreen Controller.
LCD-AU084-V3-RS-SET		LCD-IVO084-RS-SET	IVO 8.4" M084GNS1 R1 350nits w/ LVDS Cable,Touch Screen and RS232 TouchScreen Controller.

AUO G084SN03V3:

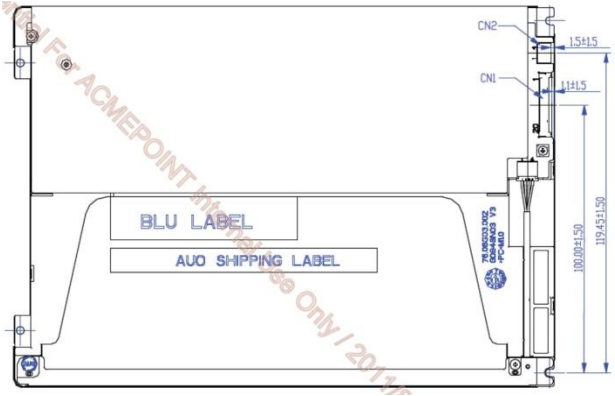

IVO M084GNS1 R1:

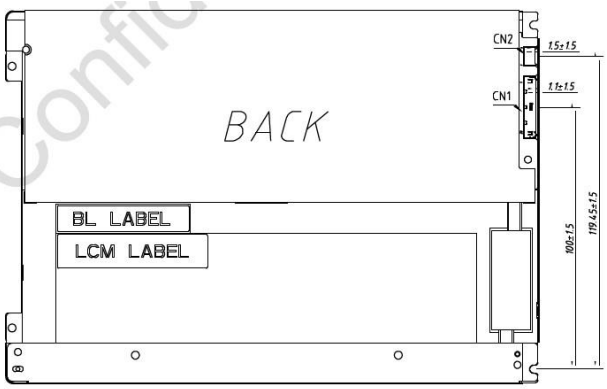

----------end----------

IVO Product Specification

To:

Product Name: M084GNS1 R1

Document Issue Date: 2016/05/13

Customer	InfoVision Optoelectronics
SIGNATURE _____ _____ _____ Please return 1 copy for your confirmation with your signature and comments.	**SIGNATURE** **REVIEWED BY CQM** _____ **PREPARED BY FAE** _____

Note : 1. Please contact InfoVision Company before designing your product based on this product.
2. The information contained herein is presented merely to indicate the characteristics and performance of our products. No responsibility is assumed by IVO for any intellectual property claims or other problems that may result from application based on the module described herein.

FQ-7-30-0-009-03D

IVO Confidential document

All rights strictly reserved reproduction or issue to third parties in any form whatever is not permitted without written authority from the proprietor.

Revised Record				
Ver	Date	Revised Content/Summary	Page	Remark
00	2015/10/21	Tentative	All	
01	2016/05/13	Final	All	

IVO Confidential document

All rights strictly reserved reproduction or issue to third parties in any form whatever is not permitted without written authority from the proprietor.

Contents

1.0 GENERAL DESCRIPTIONS 4

2.0 ABSOLUTE MAXIMUM RATINGS 6

3.0 OPTICAL CHARACTERISTICS 7

4.0 ELECTRICAL CHARACTERISTICS 10

5.0 MECHANICAL CHARACTERISTICS 21

6.0 RELIABILITY CONDITIONS 23

7.0 PACKAGE SPECIFICATION 24

9.0 GENERAL PRECAUTION 26

IVO Confidential document

All rights strictly reserved reproduction or issue to third parties in any form whatever is not permitted without written authority from the proprietor.

1.0 General Descriptions

1.1 Introduction

The M084GNS1 R1 is a Color Active Matrix Liquid Crystal Display with a back light system. The matrix employs a-Si Thin Film Transistor as a switching device. This TFT LCD has a 8.4 inch diagonally measured active display area with SVGA resolution (800 horizontal by 600 vertical pixels array).

1.2 Features

- Supported SVGA Resolution
- LVDS Interface
- Compatible with RoHS Standard

1.3 Product Summary

Items	Specifications	Unit
Screen Diagonal	8.4	inch
Active Area (H x V)	170.4(H) x127.8(V)	mm
Number of Pixels (H x V)	800x 600	-
Pixel Pitch (H x V)	0.213 x 0.213	mm
Pixel Arrangement	R.G.B. Vertical Stripe	-
Display Mode	Normally White	-
White Luminance	(350) (Typ.)	cd /m^2
Contrast Ratio	(600) (Typ.)	-
Response Time	(16)(Typ.)	ms
Input Voltage	3.3 (Typ.)	V
Power Consumption	(2.81)(Max)	W
Weight	(200) (Typ)	g
Outline Dimension (H x V x D)	(203. 0) (Typ.) x (142.5) (Typ.) x (5.7)(Typ.)	mm
Electrical Interface (Logic)	LVDS	-
Support Color	262 K/16.7 M	-
NTSC	(45)(Typ.)	%
Viewing Direction	12 O'clock	-
Surface Treatment	Anti-glare	-

IVO Confidential document

All rights strictly reserved reproduction or issue to third parties in any form whatever is not permitted without written authority from the proprietor.

1.4 Functional Block Diagram

Figure 1 shows the functional block diagram of the LCD module.

Figure 1 Block Diagram

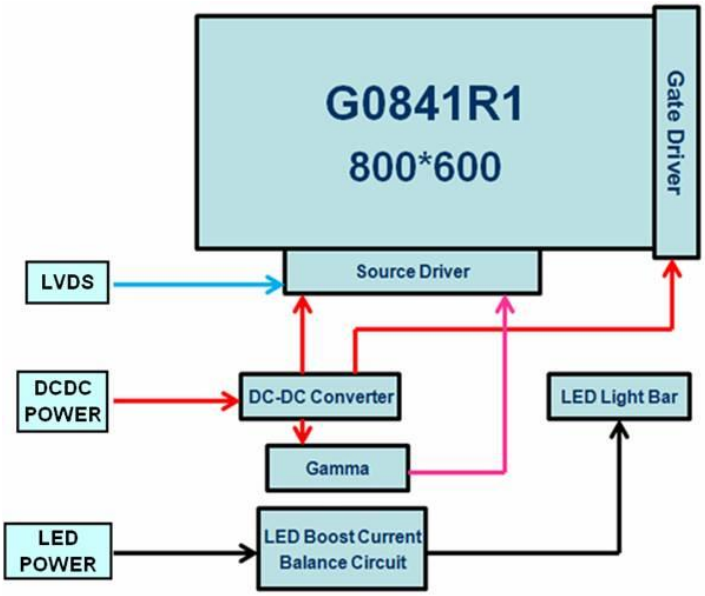

1.5 Pixel Mapping

Figure2 Pixel Mapping

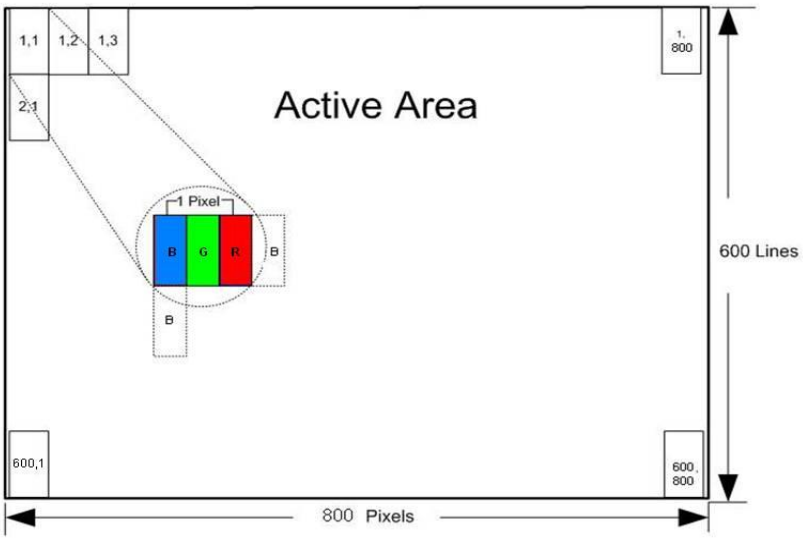

All rights strictly reserved reproduction or issue to third parties in any form whatever is not permitted without written authority from the proprietor.

2.0 Absolute Maximum Ratings

Table 1 Electrical & Environment Absolute Rating

Item	Symbol	Min.	Max.	Unit	Note
Logic Supply Voltage	V_{DD}	2.5	3.6	V	(1),(2) (3),(4)
Logic Input Signal Voltage	V_{Signal}	0	3.6	V	
Operating Temperature	T_{gs}	-20	70	℃	
Storage Temperature	T_a	-30	80	℃	

Note (1) All the parameters specified in the table are absolute maximum rating values that may cause faulty operation or unrecoverable damage, if exceeded. I t is recommended to follow the typical value.

Note (2) All the contents of electro-optical specifications and display fineness are guaranteed under Normal Conditions. All the display fineness should be inspected under normal conditions. Normal conditions are defined as follow: Temperature: 25℃, Humidity: 55± 10%RH.

Note (3) Unpredictable results may occur when it was used in extreme conditions. T_a= Ambient Temperature, T_{gs}= Glass Surface Temperature. All the display fineness should be inspected under normal conditions.

Note (4) Temperature and relative humidity range are shown in the figure below. Wet bulb temperature should be lower than 39℃, and no condensation of water. Besides, protect the module from static electricity.

Figure 3 Absolute Ratings of Environment of the LCD Module

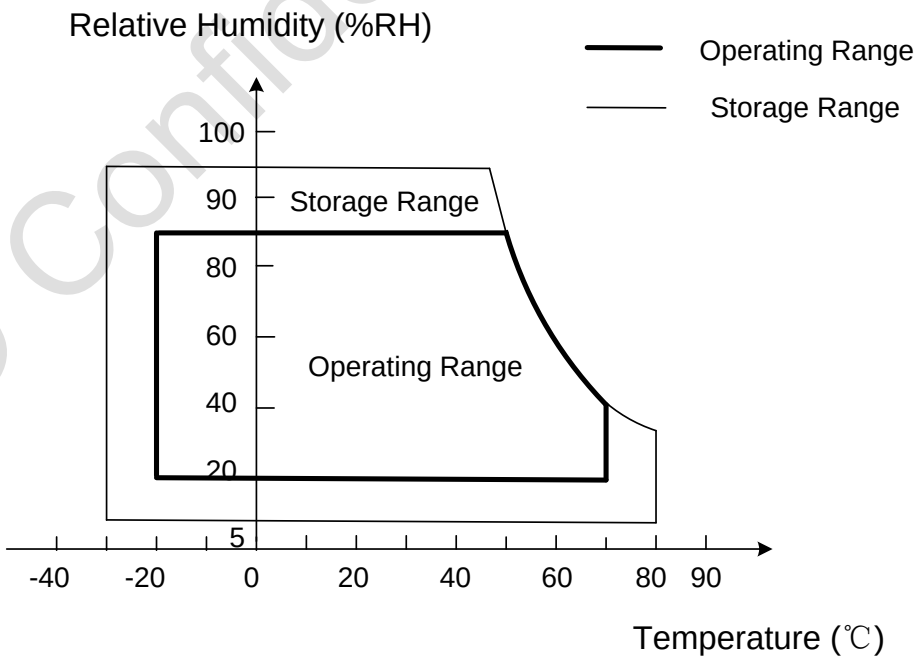

IVO Confidential Document

All rights strictly reserved reproduction or issue to third parties in any form whatever is not permitted without written authority from the proprietor.

3.0 Optical Characteristics

The optical characteristics are measured under stable conditions as following notes.

Table 2 Optical Characteristics

Item	Conditions		Min.	Typ.	Max.	Unit	Note
Viewing Angle（CR>10）	Horizontal	θ_{x+}	(70)	(80)	-	degree	(1),(2),(3),(8)
		θ_{x-}	(70)	(80)	-		
	Vertical	θ_{y+}	(70)	(80)	-		
		θ_{y-}	(50)	(60)	-		
Contrast Ratio	Center		(480)	(600)	-	-	(1),(2),(4),(8) θx=θy=0°
Response Time	Rising + Falling		-	(16)	(25)	ms	(1),(2),(5),(8) θx=θy=0°
Color Chromaticity (CIE1931)	Red x		Typ -(0.03)	(0.603)	Typ +(0.03)	-	(1),(2),(3),(8) θx=θy=0°
	Red y			(0.336)		-	
	Green x			(0.326)		-	
	Green y			(0.546)		-	
	Blue x			(0.159)		-	
	Blue y			(0.110)		-	
	White x		(0.26)	(0.310)	(0.36)	-	
	White y		(0.28)	(0.330)	(0.38)	-	
NTSC	-		(42)	(45)	-	%	(1),(2),(3),(8) θx=θy=0°
White Luminance	Center point		(280)	(350)	-	cd/m^2	(1),(2) θx=θy=0°
Luminance Uniformity	9 Points		(70)	(75)	-	%	(1),(2),(6) θx=θy=0°

Note (1) Measurement Setup:

The LCD module should be stabilized at given ambient temperature(25℃) for 30 minutes to avoid abrupt temperature changing during measuring. In order to stabilize the luminance, the measurement should be executed after lighting backlight for 30 minutes in the windless room.

IVO Confidential document

All rights strictly reserved reproduction or issue to third parties in any form whatever is not permitted without written authority from the proprietor.

Figure 4 Measurement Setup

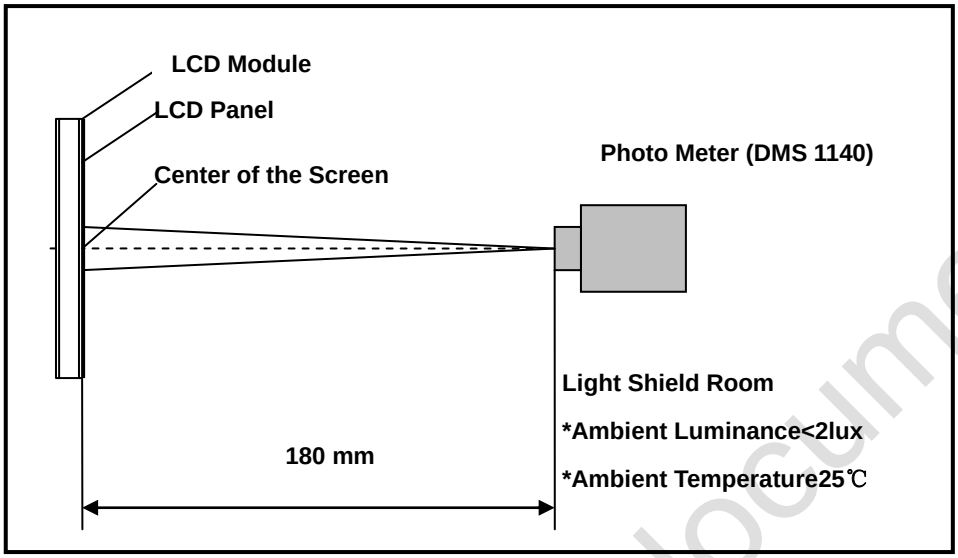

Note (2) The LED input parameter setting as:

I_LED: 68mA

PWM_LED: Duty 100 %

Note (3) Definition of Viewing Angle

Figure 5 Definition of Viewing Angle

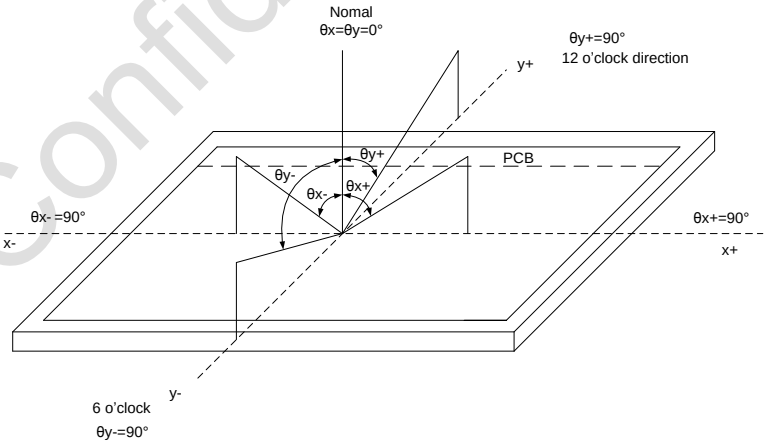

IVO Confidential document

All rights strictly reserved reproduction or issue to third parties in any form whatever is not permitted without written authority from the proprietor.

Note (4) Definition of Contrast Ratio (CR)

The contrast ratio can be calculated by the following expression:

6bit: Contrast Ratio (CR) = L63 / L0

L63: Luminance of gray level 63, L0: Luminance of gray level 0

8bit: Contrast Ratio (CR) = L255 / L0

L255: Luminance of gray level 255, L0: Luminance of gray level 0

Note (5) Definition of Response Time (T_R, T_F)

Figure 6 Definition of Response Time

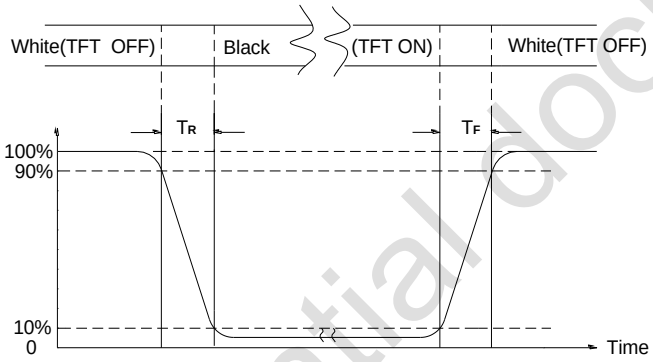

Note (6) Definition of Luminance Uniformity (Ref.: Active Area)

Measure the luminance of gray level 255 at 9 points.

Luminance Uniformity= Min.(L1, L2, ... L9) / Max.(L1, L2, ... L9)

H—Active Area Width, V—Active Area Height, L—Luminance

Figure 7 Measurement Locations of 9 Points

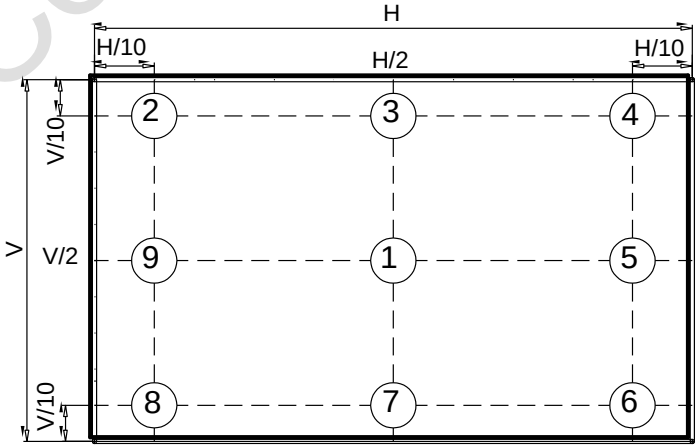

IVO Confidential document

All rights strictly reserved reproduction or issue to third parties in any form whatever is not permitted without written authority from the proprietor.

Note (7) Definition Of Luminance Uniformity (Ref.: Active Area)
Measure the luminance of gray level 255 at 9 points.
Luminance Uniformity= Min.(L1, L2, ... L9) / Max.(L1, L2, ... L9)
H—Active Area Width, V—Active Area Height, L—Luminance

Note (8) All optical data based on IVO given system & nominal parameter & testing machine in this document.

4.0 Electrical Characteristics

4.1 Interface Connector

Table 3 Signal Connector Type

Item	Description
LVDS Connector	MSB24013P20
LED Driver Connector	MSB24038P4

Table 4-1 LVDS&POWER Connector Pin Assignment

Pin No.	Symbol	Description	Remarks
1	VDD	Power Supply, 3.3V (typical)	-
2	VDD	Power Supply, 3.3V (typical)	-
3	UD	Vertical Reverse Scan control.	(1)(2)(3)(4)
4	LR	Horizontal Reverse Scan control	
5	RxIN1-	-LVDS differential data input (R0-R5,G0)	-
6	RxIN1+	+LVDS differential data input (R0-R5,G0)	-
7	GND	Ground	-
8	RxIN2-	-LVDS differential data input (G1-G5,B0-B1)	-
9	RxIN2+	+LVDS differential data input (G1-G5,B0-B1)	-
10	GND	Ground	-
11	RxIN3-	-LVDS differential data input (B2-B5,HS,VS,DE)	-
12	RxIN3+	+LVDS differential data input (B2-B5,HS,VS,DE)	-
13	GND	Ground	-
14	RxCLKIN-	-LVDS differential clock input	-
15	RxCLKIN+	+LVDS differential clock input	-
16	GND	Ground	-
17	SEL68	6/8 bits LVDS data input selection(H:8bit L/NC:6bit)	VH:2.5V-3.6V
18	BIST	H:BIST MODE, L/NC: Normal MODE	VL:0V-0.5V

IVO confidential document

All rights strictly reserved reproduction or issue to third parties in any form whatever is not permitted without written authority from the proprietor.

19	RxIN4-	-LVDS differential data input (R6-R7,G6-G7,B6-B7)	-
20	RxIN4+	+LVDS differential data input (R6-R7,G6-G7,B6-B7)	-

Table 4-2 LED Driver Connector Pin Assignment

Pin No.	Symbol	Description	Remarks
1	VLED	LED Driver Power Supply, 12V (typical)	-
2	GND	Ground	-
3	EN	LED Driver Enable	VH:2.5V-6V
4	PWM	PWM Signal input	VL:0V-0.5V

(1) UD= HIGH(VH:2.5V-3.6V),LR=LOW(VL:0V-0.5V)

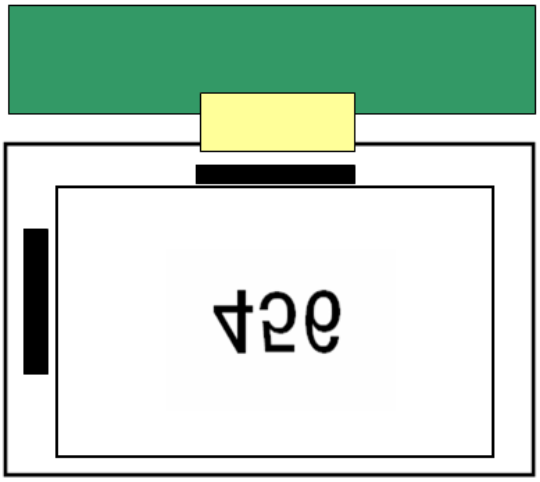

(2) UD= HIGH(VH:2.5V-3.6V),LR=HIGH(VH:2.5V-3.6V)

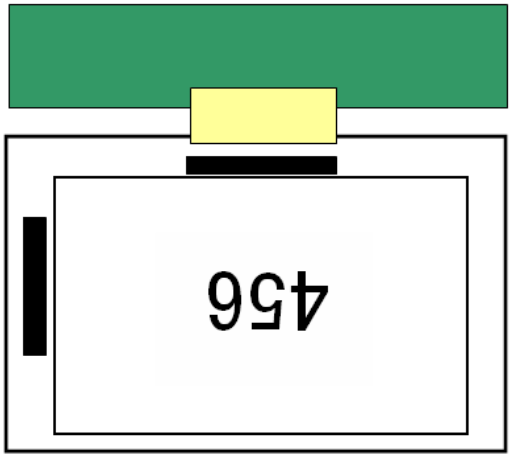

IVO Confidential document

All rights strictly reserved reproduction or issue to third parties in any form whatever is not permitted without written authority from the proprietor.

(3) UD= LOW(VL:0V-0.5V),LR=LOW(VL:0V-0.5V)

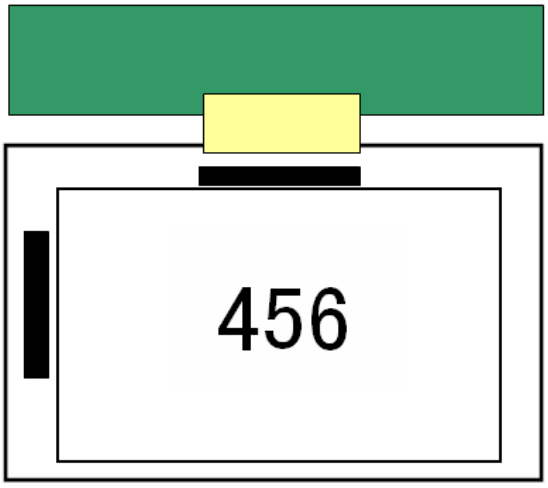

(4) UD= LOW(VL:0V-0.5V),LR=HIGH(VH:2.5V-3.6V)

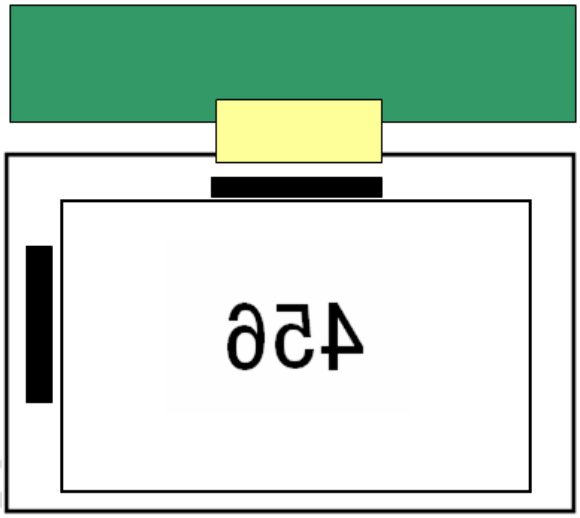

4.2 Signal Electrical Characteristics

4.2.1 Signal Electrical Characteristics For LVDS Receiver

The built-in LVDS receiver is compatible with (ANSI/TIA/TIA-644) standard.

Table 5 LVDS Receiver Electrical Characteristics

Parameter	Symbol	Min.	Typ.	Max.	Unit	Conditions
Differential Input High Threshold	Vth	-	-	+100	mV	V_{CM}=+1.2V
Differential Input Low Threshold	Vtl	-100	-	-	mV	V_{CM}=+1.2V
Magnitude Differential Input Voltage	$\|V_{ID}\|$	200	-	600	mV	-
Common Mode Voltage	V_{CM}	$\|V_{ID}\|/2$	1.2	1.4	V	V_{th}-V_{tl}=200mV
Common Mode Voltage Offset	ΔV_{CM}	-50	-	+50	mV	V_{th}-V_{tl}=200mV

Note (1) Input signals shall be low or Hi- resistance state when VDD is off.

All rights strictly reserved reproduction or issue to third parties in any form whatever is not permitted without written authority from the proprietor.

Note (2) All electrical characteristics for LVDS signal are defined and shall be measured at the interface connector of LCD.

Figure 8 Voltage Definitions

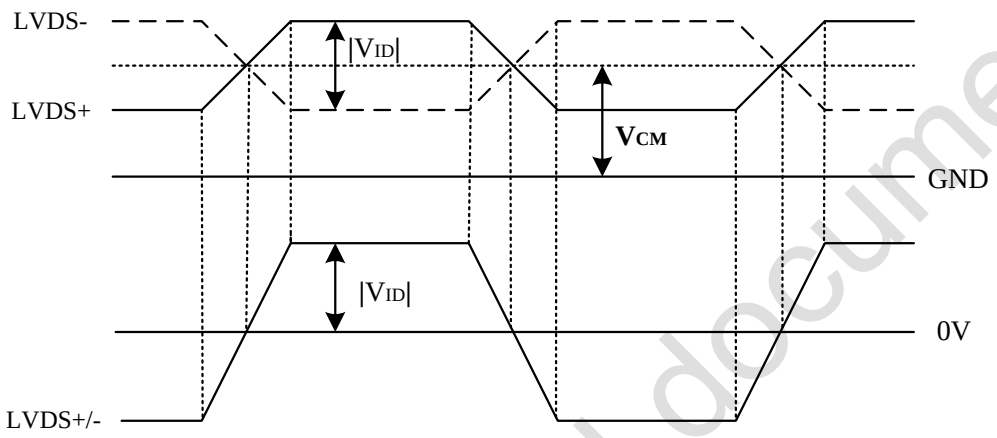

Figure 9 Measurement System

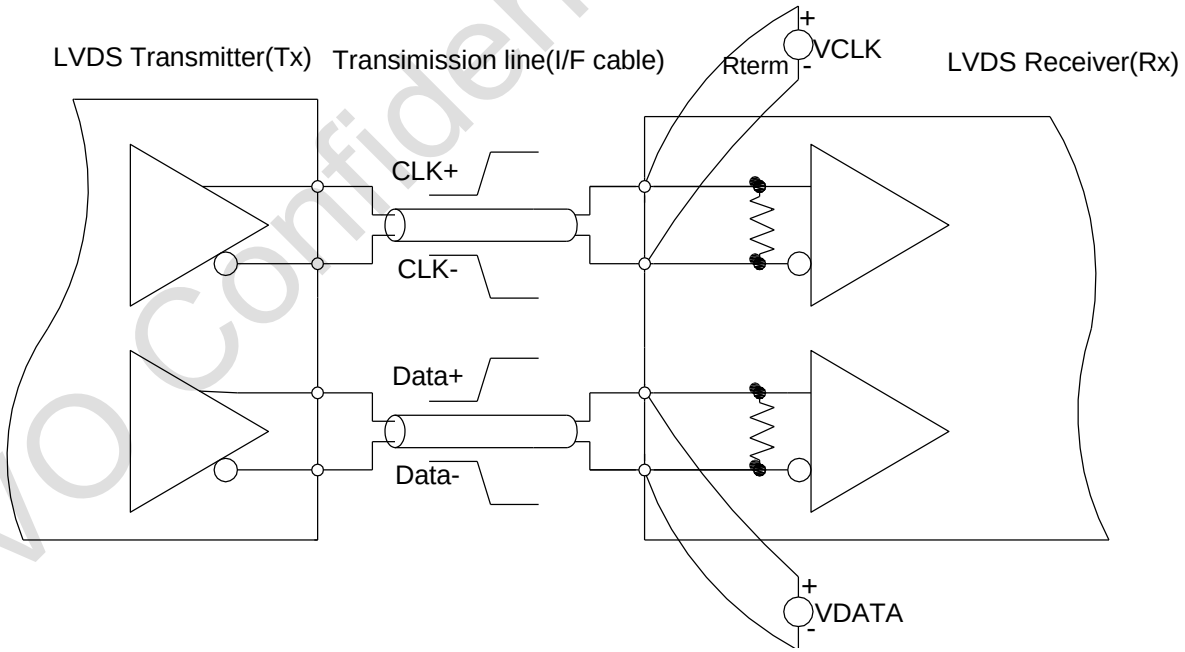

IVO Confidential document

All rights strictly reserved reproduction or issue to third parties in any form whatever is not permitted without written authority from the proprietor.

Figure 10 Data Mapping

Single 6 bit LVDS input

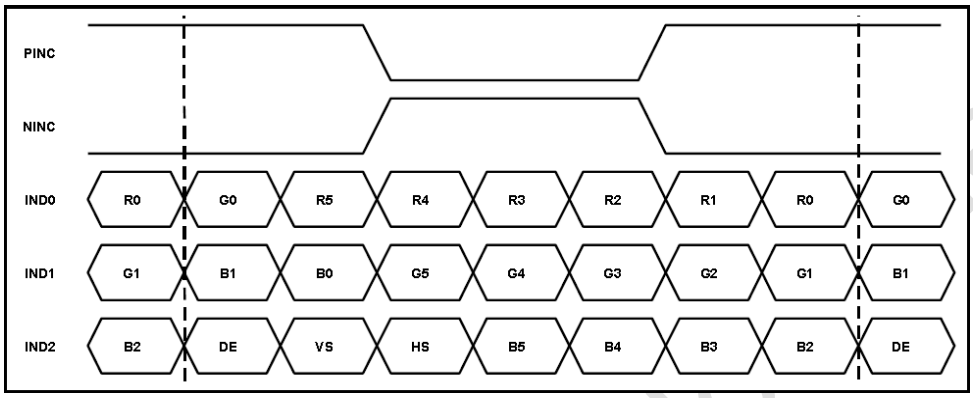

Single 8 bit LVDS input

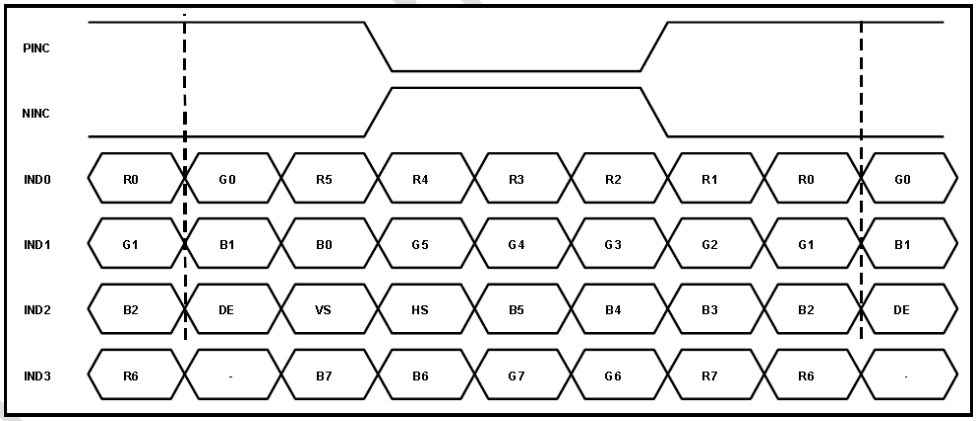

All rights strictly reserved reproduction or issue to third parties in any form whatever is not permitted without written authority from the proprietor.

4.2.2 LVDS Receiver Internal Circuit

Figure 11 LVDS Receiver Internal Circuit shows the internal block diagram of the LVDS receiver. This LCD module equips termination resistors for LVDS link.

Figure 11 LVDS Receiver Internal Circuit

6bit

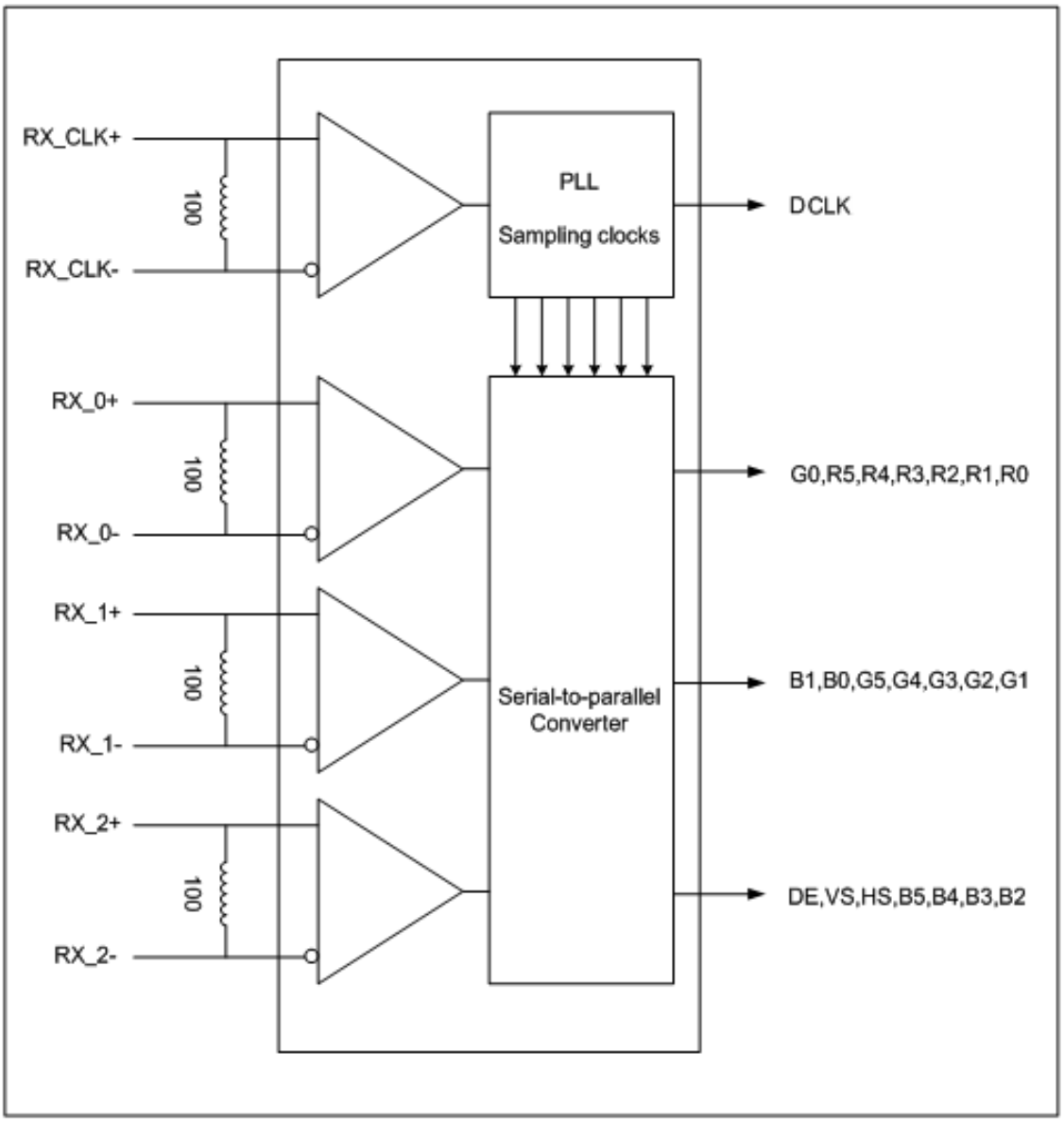

All rights strictly reserved reproduction or issue to third parties in any form whatever is not permitted without written authority from the proprietor.

8bit

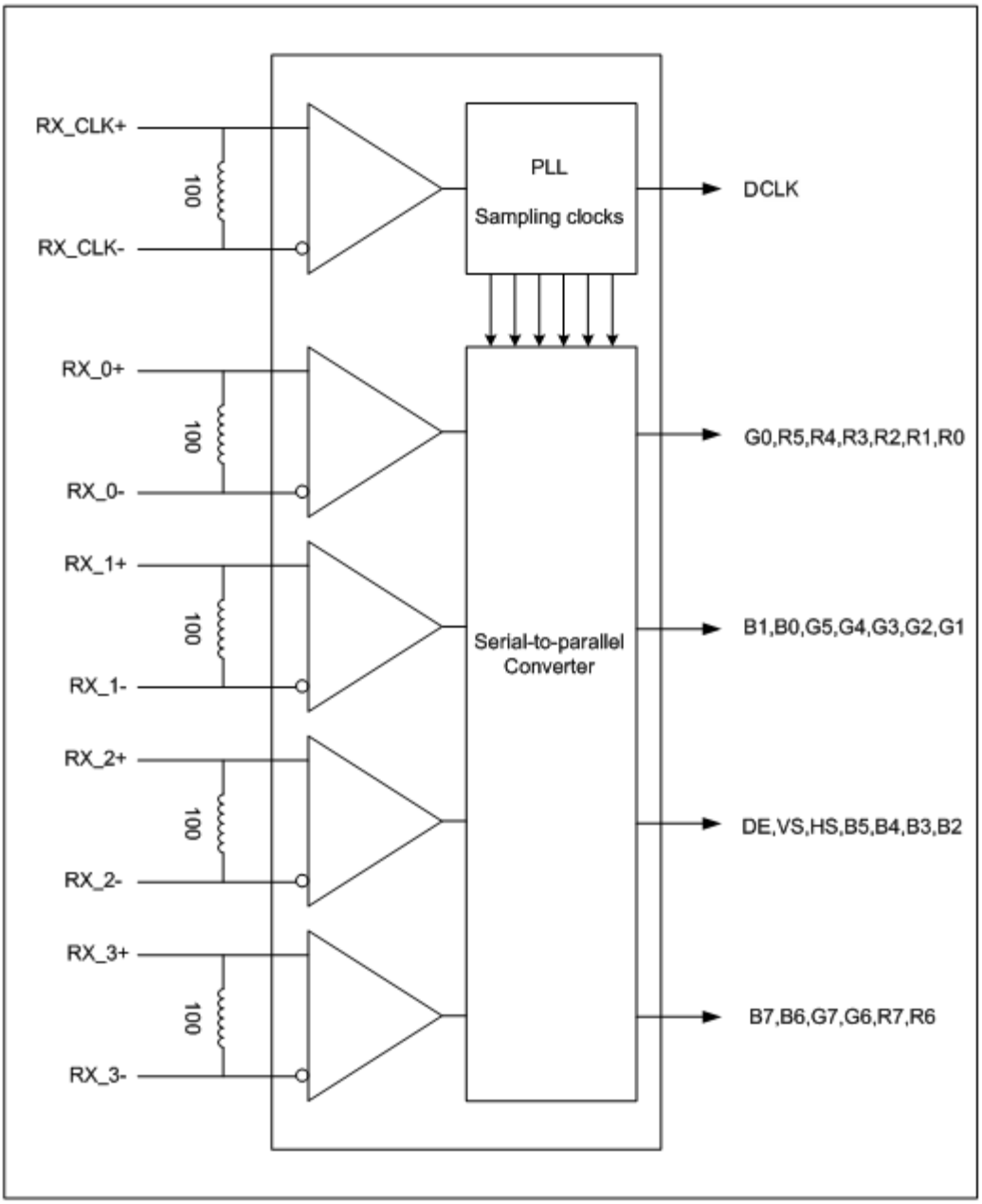

All rights strictly reserved reproduction or issue to third parties in any form whatever is not permitted without written authority from the proprietor.

4.3 Interface Timings

Table 6 Interface Timings

Parameter	Symbol	Min.	Typ.	Max.	Unit
LVDS Clock Frequency	Fclk	32.6	39.6	62.4	MHz
H Total Time	HT	890	1000	1300	Clocks
H Active Time	HA	800	800	800	Clocks
V Total Time	VT	610	660	800	Lines
V Active Time	VA	600	600	600	Lines
Frame Rate	FV	55	60	65	Hz

Note：Htotal*Vtotal*Frame Rate＜67.6MHz

4.4 Input Power Specifications

Input power specifications are as follows.

Table 7 Input Power Specifications

Parameter		Symbol	Min.	Typ.	Max.	Unit	Note
System Power Supply							
LCD Drive Voltage (Logic)		V_{DD}	3.0	3.3	3.6	V	(1),(2),(3)
VDD Current	black Pattern	I_{DD}	-	-	(0.139)	A	(1),(4)
VDD Power Consumption	black Pattern	P_{DD}	-	-	(0.5)	W	
Rush Current		I_{Rush}	-	-	2	A	(1)(5)
Allowable Logic/LCD Drive Ripple Voltage		V_{VDD-RP}	-	-	200	mV	(1)
LED Power Supply							
LED Input Voltage		V_{LED}	10.8	12	13.2	V	(1),(2),(10)
LED Power Consumption		P_{LED}	-	-	(2.31)	W	(1),(6),(10)
LED Forward Voltage		V_F	2.8	3.3	3.6	V	(1), (2)
LED Forward Current		I_F	-	17	-	mA	
PWM Signal Voltage	High	V_{PWM}	(2.5)	-	(6)	V	
	Low		0	-	0.5		
LED Enable Voltage	High	V_{LED_EN}	(2.5)	-	(6)	V	
	Low		0	-	0.5		
Input PWM Frequency		F_{PWM}	100	-	2,0000	Hz	(1),(2),(7)
Duty Ratio		PWM	5	-	100	%	(1), (8)

IVO Confidential Document

All rights strictly reserved reproduction or issue to third parties in any form whatever is not permitted without written authority from the proprietor.

LED Life Time	LT	(30,000)	(50,000)	-	Hours	(1)(9)

Note (1) All of the specifications are guaranteed under normal conditions. Normal conditions are defined as follow: Temperature: 25℃, Humidity: 55± 10%RH.

Figure 12 VDD Rising Time

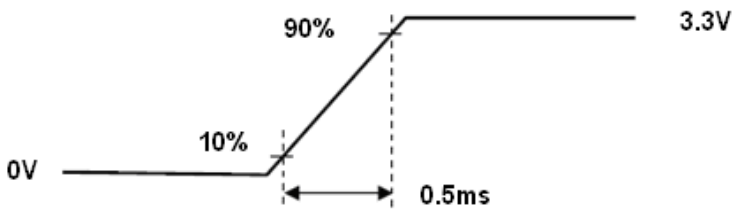

Note (2) All of the absolute maximum ratings specified in the table, if exceeded, may cause faulty operation or unrecoverable damage. It is recommended to follow the typical value.

Note (3) VDD Power Dip Condition V_{TH}< V_{DD}≤ Vmin, td≤ 10ms (a time of the voltage return to normal), our panel can recover automatically.Note (4) The specified V_{DD} current and power consumption are measured under the V_{DD} = 3.3 V,

F_V = 60 Hz condition and Black pattern.

Figure 13 VDD Power Dip

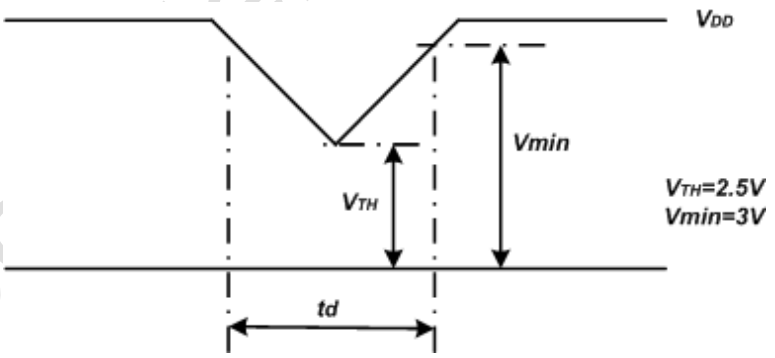

Note (5) The figures below are the measuring condition of V_{DD} and the measuring circuit that IVO display used. Rush current can be measured when T_{RUSH} is 0.5 ms.

.

IVO Confidential document

All rights strictly reserved reproduction or issue to third parties in any form whatever is not permitted without written authority from the proprietor.

Figure 14 measuring circuit of V_{DD}

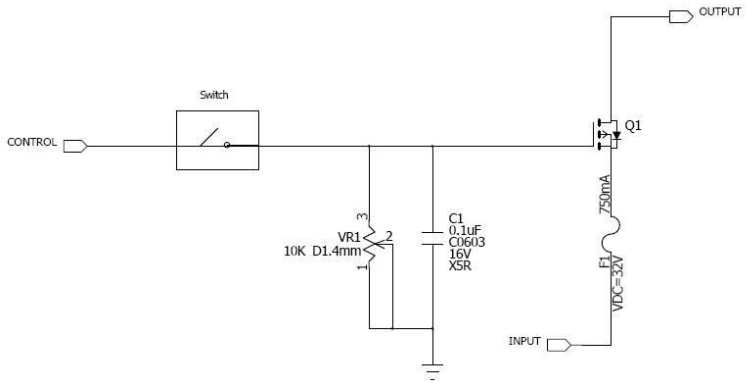

Note (6) The power consumption of LED Driver are under the V_{LED} = 12.0V, Dimming of Max luminance.

Note (7) Although acceptable range as defined, the dimming ratio is not effective at all conditions. The PWM frequency should be fixed and stable for more consistent luminance control at any specific level desired.

Note (8) The operation of LED Driver below minimum dimming ratio may cause flickering or reliability issue.

Note (9) The life time is determined as the sum of the lighting time till the luminance of LCD at the typical LED current reducing to 50% of the minimum value under normal operating condition.

IVO Confidential document

All rights strictly reserved reproduction or issue to third parties in any form whatever is not permitted without written authority from the proprietor.

4.5 Power ON/OFF Sequence

Interface signals are also shown in the chart. Signals from any system shall be Hi- resistance state or low level when VDD voltage is off.

Figure 15 Power Sequence

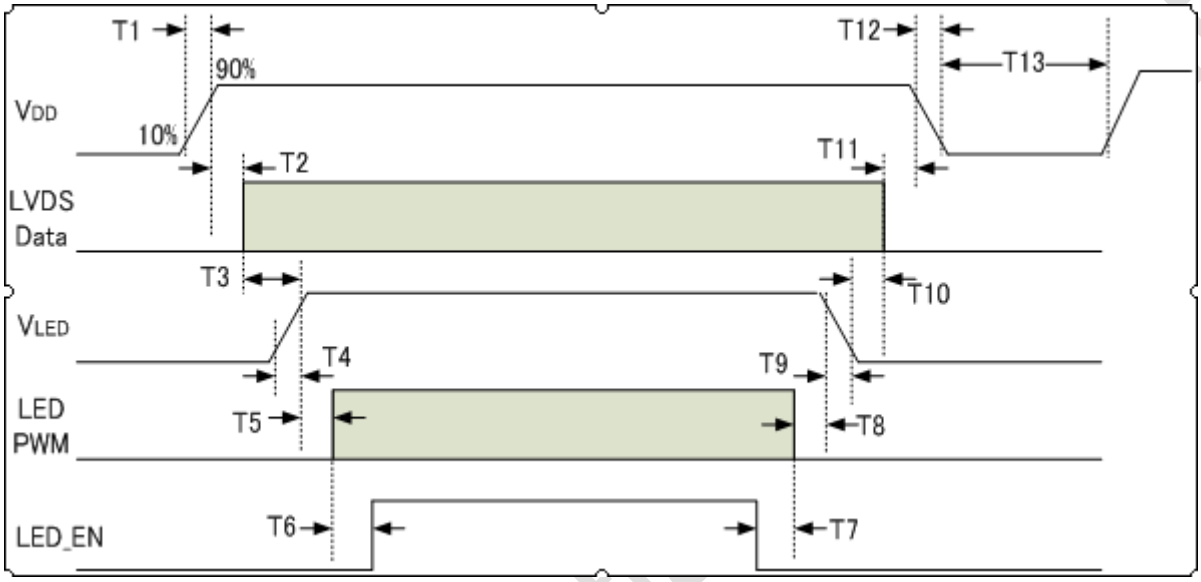

Table 8 Power Sequencing Requirements

Parameter	Symbol	Min.	Typ.	Max.	Unit
VIN Rise Time	T1	0.5	-	10	ms
VIN Good to Signal Valid	T2	30	-	90	ms
Signal Valid to Backlight On	T3	200	-	-	ms
Backlight Power On Time	T4	0.5	-	-	ms
Backlight VDD Good to System PWM On	T5	10	-	-	ms
System PWM ON to Backlight Enable ON	T6	10	-	-	ms
Backlight Enable Off to System PWM Off	T7	0	-	-	ms
System PWM Off to B/L Power Disable	T8	10	-	-	ms
Backlight Power Off Time	T9	1	10	30	ms
Backlight Off to Signal Disable	T10	200	-	-	ms
Signal Disable to Power Down	T11	0	-	50	ms
VIN Fall Time	T12	1	10	30	ms
Power Off	T13	500	-	-	ms

All rights strictly reserved reproduction or issue to third parties in any form whatever is not permitted without written authority from the proprietor.

5.0 Mechanical Characteristics

5.1 Outline Drawing

Figure 16 Outline Drawing (Front Side)

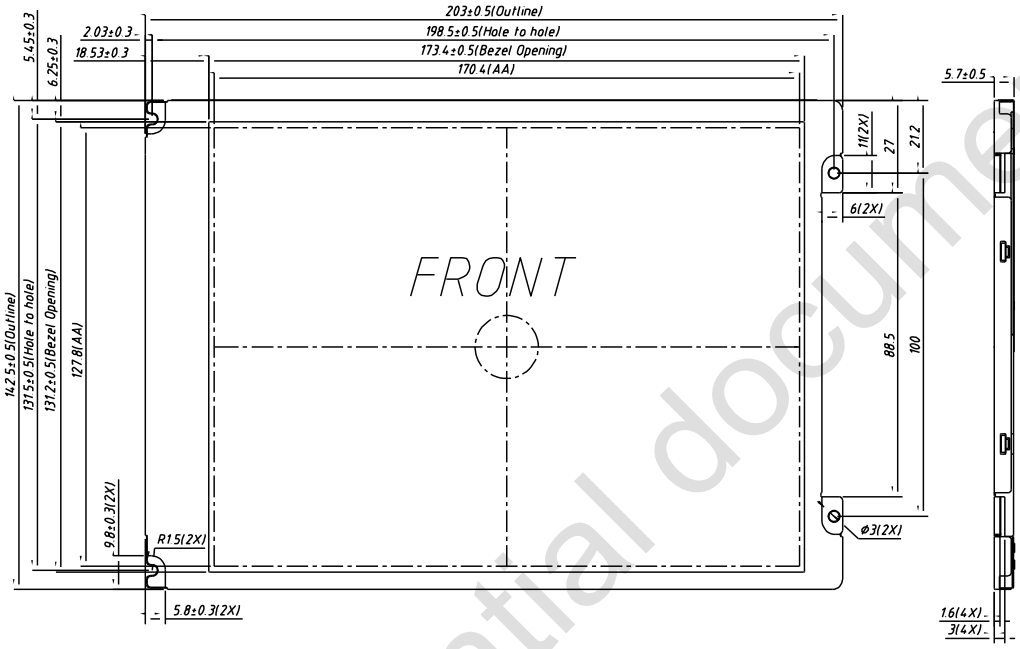

Figure 17 Reference Outline Drawing (Back Side)

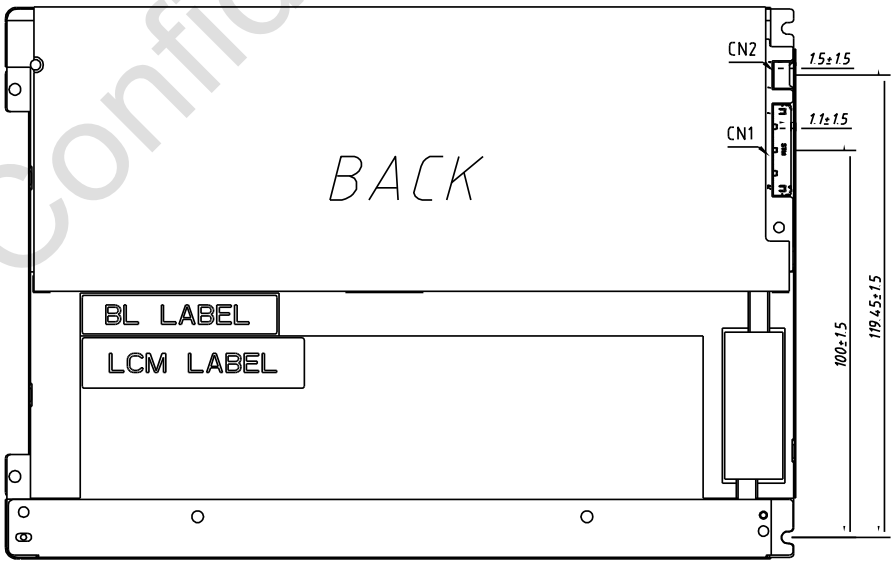

Note (1)Unnoted tolerance :±0.5mm.

IVO Confidential document

All rights strictly reserved reproduction or issue to third parties in any form whatever is not permitted without written authority from the proprietor.

5.2 Dimension Specifications

Table 9 Module Dimension Specifications

Item	Min.	Typ.	Max.	Unit
Width	(202.5)	(203)	(203.5)	mm
Height	(142)	(142.5)	(143)	mm
Thickness（with PCBA）	(5.2)	(5.7)	(6.2)	mm
Weight	-	(200)	(220)	g
BM: ｜a-b｜&｜c-d｜	-	-	1.0	mm

Figure 18 BM Area

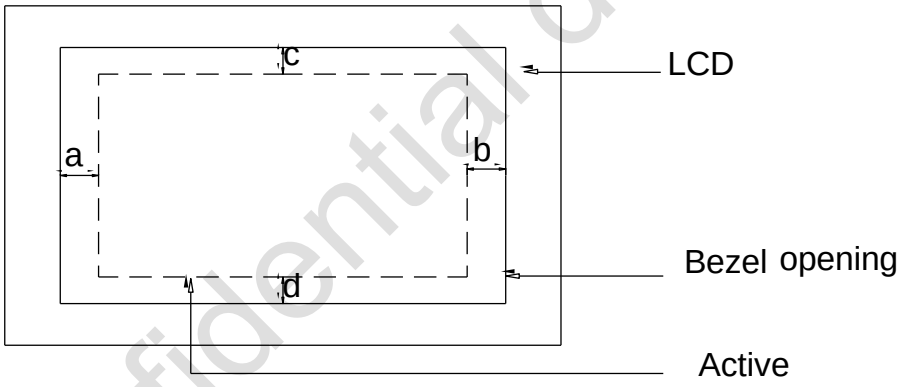

IVO Confidential document

All rights strictly reserved reproduction or issue to third parties in any form whatever is not permitted without written authority from the proprietor.

6.0 Reliability Conditions

Item		Package	Test Conditions		Note
Low Temperature Operating Test		Module	T_a= -20℃, 300 hours		(1),(2),(3),(4)
High Temperature Operating Test		Module	T_{gs}= 70℃, 300 hours		
High Temperature/High Humidity Operating Test		Module	T_{gs}= 50℃, 85%RH, 300 hours		
High Temperature Storage Test		Module	T_a= 80℃, 300 hours		(1),(3),(4)
Low Temperature Storage Test		Module	T_a= -30℃, 300 hours		
Shock Non-operating Test		Module	100G,6ms,X Y Z×2faces×3times, Total 18 times		(1) (3) (5)
Vibration Non-operating Test		Module	half-sine Frequency: 8Hz ~ 33Hz Stroke: 1.3mm Sweep: 2.9G 33.3Hz ~ 400Hz X,Z Cycle : 15 minutes 2 hrs for each direction of X,Z ; 4 hours for Y direction		
ESD Test	Operating	Module	Contact	± 8 KV, 150pF(330Ohm)	(1),(2),(6)
			Air	± 15 KV, 150pF(330Ohm)	
	Non-operating		Contact	± 10 KV, 150pF(330Ohm)	
			Air	± 20 KV, 150pF(330Ohm)	

Note (1) A sample can only have one test. Outward appearance, image quality and optical data can only be checked at normal conditions according to the IVO document before reliable test. Only check the function of the module after reliability test.

Note (2) The setting of electrical parameters should follow the typical value before reliability test.

Note (3) During the test, it is unaccepted to have condensate water remains. Besides, protect the module from static.

Note (4) The sample must be released for 24 hours under normal conditions before judging. Furthermore, all the judgment must be made under normal conditions. Normal conditions are defined as follow: Temperature: 25℃, Humidity: 55± 10%RH. T_A= Ambient Temperature, T_{GS}=

All rights strictly reserved reproduction or issue to third parties in any form whatever is not permitted without written authority from the proprietor.

Glass Surface Temperature.

Note (5) The module should be fixed firmly in order to avoid twisting and bending.

Note (6) It could be regarded as pass, when the module recovers from function fault caused by ESD after resetting.

Note (7) Image Sticking test should follow IVO recommend setting-voltage: Gamma, VGH, VGL, AVDD etc. Before the test, V_{com} must be adjusted to optimize display quality.

7.0 Package Specification

Figure 19 Packing Method

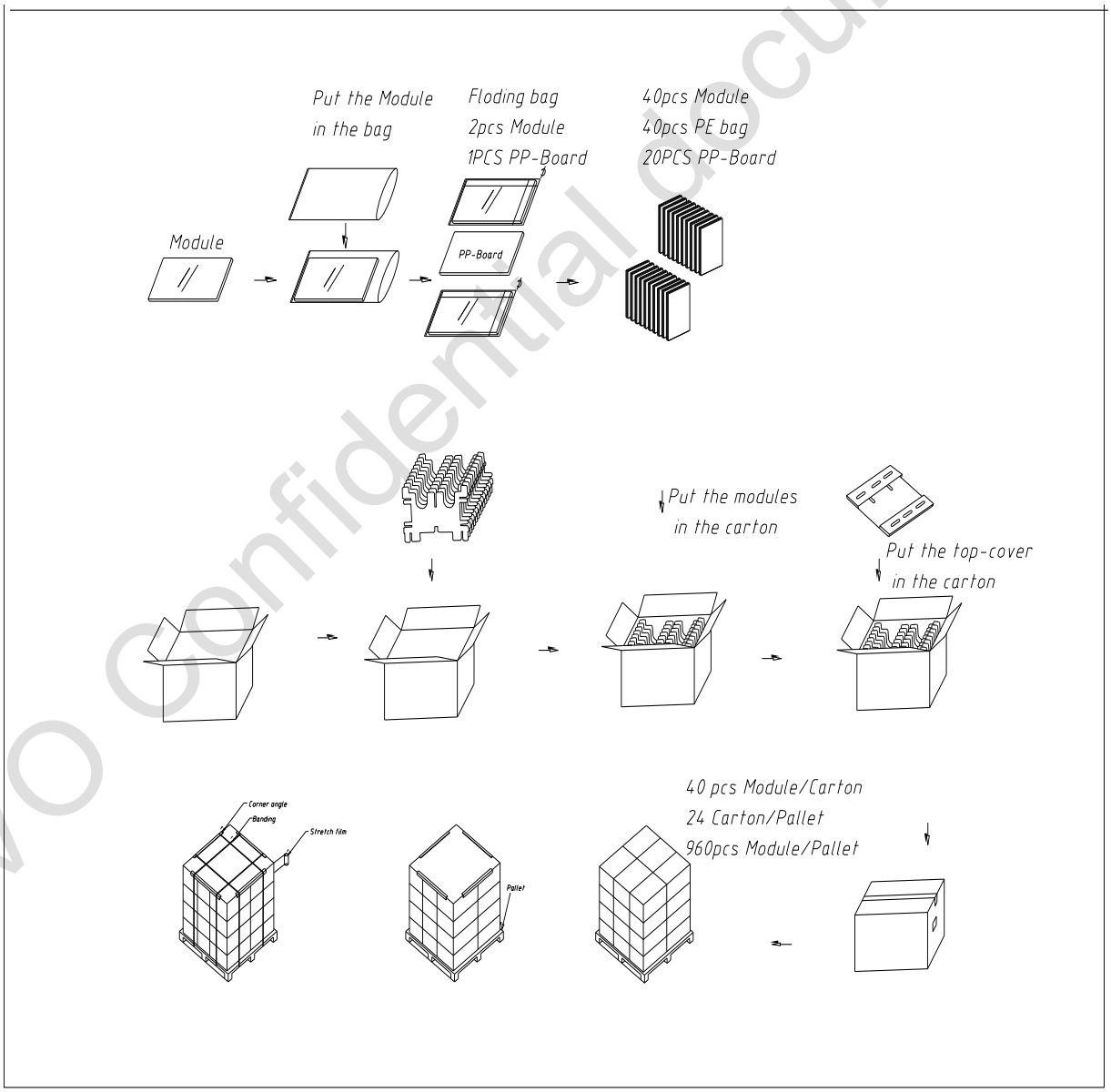

IVO Confidential document

All rights strictly reserved reproduction or issue to third parties in any form whatever is not permitted without written authority from the proprietor.

8.0 Lot Mark

Note: This picture is only an example.

8.1 20 Lot Mark

1	2	3	4	5	6	7	8	9	10	11	12	13	14	15	16	17	18	19	20

Code 1,2,4,5,6,7,8,9,10,11,16: IVO internal flow control code.
Code 3: Production Location.
Code 12: Production Year.
Code 13: Production Month.
Code 14,15: Production Day.
Code 17,18,19,20: Serial Number.

8.2 23 Product Barcode

1	2	3	4	5	6	7	8	9	10	11	12	13	14	15	16	17	18	19	20	21	22	23

Code 1,2: Manufacture District.
Code 3,4,5,6,7: IVO internal module name.
Code 8,9,10,13,16: IVO internal flow control code.
Code 11,12: Cell location Suzhou, China defined as “KS”.
Code 14 ,15: Module location Kunshan, China defined as “KS”; Yangzhou, China defined as “YZ”; Shenzhen, China defined as “SE”; Zhuhai, China defined as “ZH”; Suzhou, China defined as “SZ”.
Code 17,18,19 : Year, Month, Day refer to Note(1), Note(2) and Note(3).
Note (1) Production Year

Year	2006	2007	2008	2009	2010	2011	2012	2013	.....	2035
Mark	6	7	8	9	A	B	C	D	.....	Z

Note (2) Production Month

IVO confidential document

All rights strictly reserved reproduction or issue to third parties in any form whatever is not permitted without written authority from the proprietor.

Month	Jan.	Feb.	Mar.	Apr.	May.	Jun.	Jul.	Aug.	Sep.	Oct	Nov.	Dec.
Mark	1	2	3	4	5	6	7	8	9	A	B	C

Note (3) Production Day: 1~V.
Code 20~23 : Serial Number.

9.0 General Precaution

9.1 Use Restriction

This product is not authorized for using in life supporting systems, aircraft navigation control systems, military systems and any other appliance where performance failure could be life-threatening or lead to be catastrophic.

9.2 Operation Precaution

. (1)The LCD product should be operated under normal conditions.
Normal conditions are defined as below:
Temperature: 25℃
Humidity: 55±10%
Display pattern: continually changing pattern (Not stationary)

(2) Brightness and response time depend on the temperature. (It needs more time to reach normal brightness in low temperature.)

(3) It is necessary for you to pay attention to condensation when the ambient temperature drops suddenly. Condensate water would damage the polarizer and electrical contacted parts of the module. Besides, smear or spot will remain after condensate water evaporating.

(4) If the absolute maximum rating value was exceeded, it may damage the module.

(5) Do not adjust the variable resistor located on the module.

(6) Sufficient suppression to the electromagnetic interference shall be done by system manufacturers. Grounding and shielding may be important to minimize the interference

(7) Image sticking may occur when the module displayed the same pattern for long time.

(8) Do not connect or disconnect the module in the “power on” condition. Power supply should always be turned on/off by the “power on/off sequence”

(9) Ultra-violet ray filter is necessary for outdoor operation.

9.3 Mounting Precaution

(1)All the operators should be electrically grounded and with Ion-blown equipment turning on when mounting or handling. Dressing finger-stalls out of the gloves is important for keeping the panel clean during the incoming inspection and the process of assembly

(2) It is unacceptable that the material of cover case contains acetic or chloric. Besides, any other material that could generate corrosive gas or cause circuit break by electro-chemical reaction is not desirable.

IVO Confidential document

All rights strictly reserved reproduction or issue to third parties in any form whatever is not permitted without written authority from the proprietor.

(3) The case on which a module is mounted should have sufficient strength so that external force is not transmitted to the module directly.

(4) It is obvious that you should adopt radiation structure to satisfy the temperature specification.

(5) So as to acquire higher luminance, the cable between the back light and the inverter of the power supply should be connected directly with a minimize length.

(6) It should be attached to the system tightly by using all holes for mounting, when the module is assembled. Be careful not to apply uneven force to the module，especially to the PCB on the back.

(7) A transparent protective film needs to be attached to the surface of the module.

(8) Do not press or scratch the polarizer exposed with anything harder than HB pencil lead. In addition, don't touch the pin exposed with bare hands directly.

(9) Clean the polarizer gently with absorbent cotton or soft cloth when it is dirty.

(10) Wipe off saliva or water droplet as soon as possible. Otherwise, it may cause deformation and fading of color.

(11) Desirable cleaners are IPA (Isopropyl Alcohol) or hexane. Do not use Ketone type materials (ex. Acetone), Ethyl alcohol, Toluene, Ethyl acid or Methyl chloride. It might permanent damage to the polarizer due to chemical reaction.

(12) Do not disassemble or modify the module. It may damage sensitive parts in the LCD module, and cause scratches or dust remains. IVO does not warrant the module, if you disassemble or modify the module.

9.4 Handling Precaution

(1) Static electricity will generate between the film and polarizer, when the protection film is peeled off. It should be peeled off slowly and carefully by operators who are electrically grounded and with Ion-blown equipment turning on. Besides, it is recommended to peel off the film from the bonding area.

(2) The protection film is attached to the polarizer with a small amount of glue. When the module with protection film attached is stored for a long time, a little glue may remain after peeling.

(3) If the liquid crystal material leaks from the panel, keep it away from the eyes and mouth. In case of contact with hands, legs or clothes, it must be clean with soap thoroughly.

IVO Confidential document

All rights strictly reserved reproduction or issue to third parties in any form whatever is not permitted without written authority from the proprietor.

9.5 Storage Precaution

When storing modules as spares for long time, the following precautions must beexecuted.

(1)Store them in a dark place. Do not expose the module to sunlight or fluorescent light. Keep the temperature between 5℃ and 35℃ at normal humidity.

(2) The polarizer surface should not come in contact with any other object. It is recommended that they be stored in the container in which they were shipped.

(3) It is recommended to use it in a short-time period, after it's unpacked. Otherwise, we would not guarantee the quality.

9.6 Others

When disposing LCD module, obey the local environmental regulations.

.

IVO Confidential document

All rights strictly reserved reproduction or issue to third parties in any form whatever is not permitted without written authority from the proprietor.